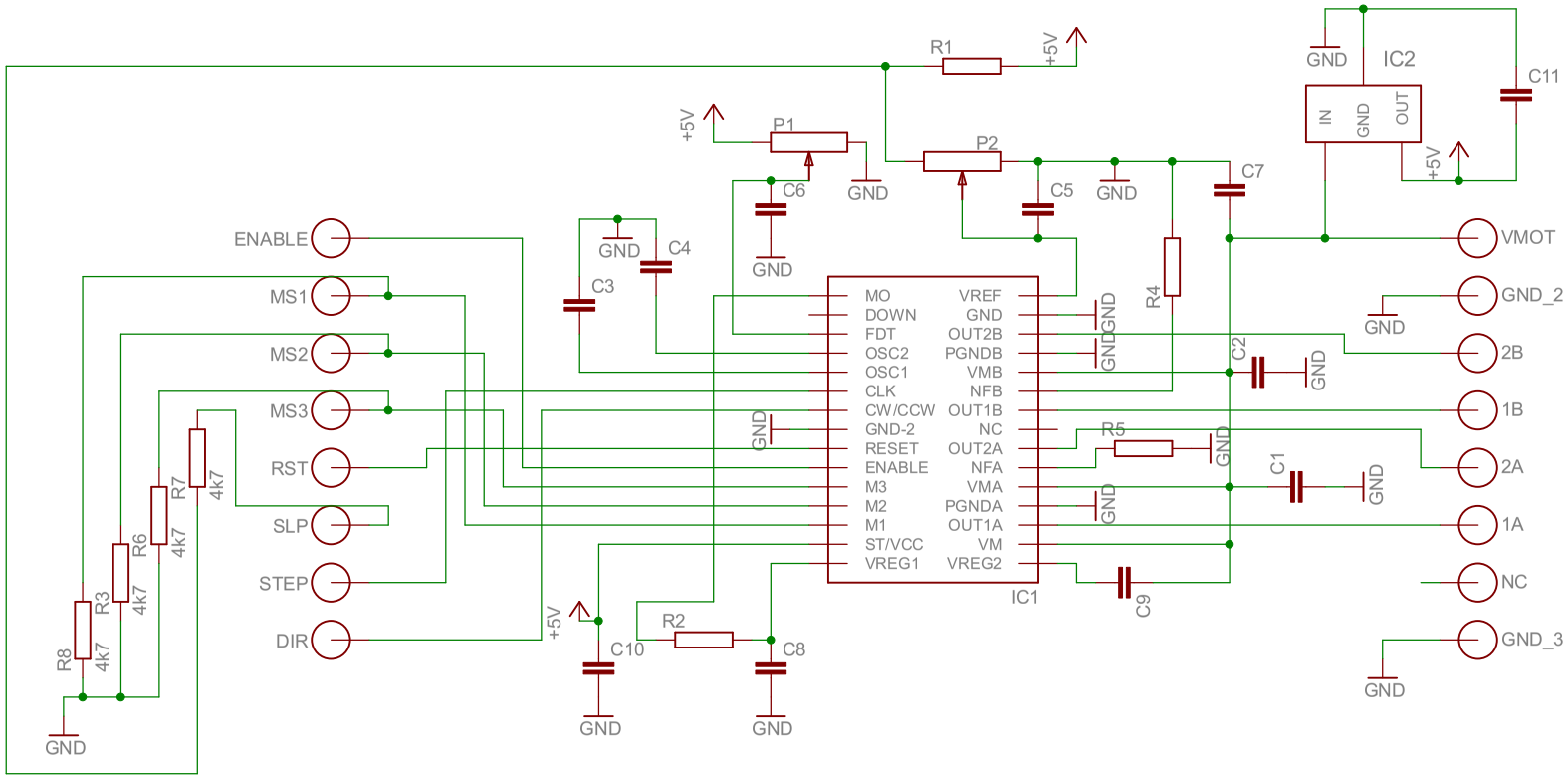
R1
+5V
P1
P2
C6
GND
C5
C7
IC2
IN
GND
OUT
C11
ENABLE
MS1
MS2
MS3
RST
SLP
STEP
DIR
C4
C3
MO
DOWN
FDT
OSC2
OSC1
CLK
CW/CCW
GND-2
RESET
ENABLE
M3
M2
M1
ST/VCC
VREG1
VREF
GND
OUT2B
PGNDB
VMB
NFB
OUT1B
NC
OUT2A
NFA
VMA
PGNDA
OUT1A
VM
VREG2
IC1
R4
C2
R5
C1
C9
VMOT
GND_2
2B
1B
2A
1A
NC
GND_3
R8
R3
R6
R7
4k7
R2
C10
C8